# FUENTE ALIMENTACIÓN TENSIÓN CONSTANTE PARA EXTERIOR

*OUTDOOR CONSTANT VOLTAGE POWER SUPPLY*

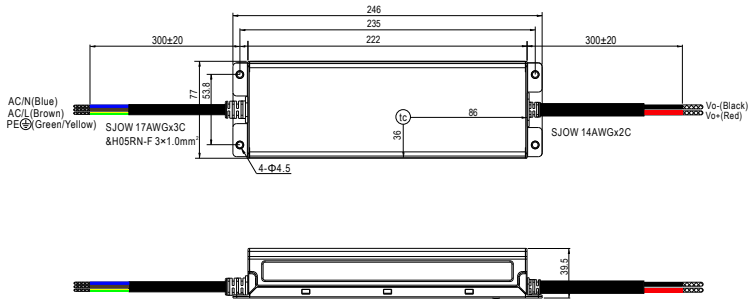

300W IP67

| Referencia<br>*Reference* | Voltaje de entrada<br>*Input voltage* | Voltaje de salida<br>*Output voltage* | Potencia<br>*Power* | IP<br>*IP* | Dimensiones<br>*Size* |
|---|---|---|---|---|---|
| ELG30012 | AC90-264V | 12V | 300W | 67 | 246x77x39.5 |
| ELG30024 | AC90-264V | 24V | 300W | 67 | 246x77x39.5 |

| | |
|---|---|
| Certificación<br>*Certification* | UL8750(type"HL")(Except for 12V), CSA C22.2 No. 250.13-12; ENEC EN61347-1, EN61347-2-13 independent, EN62384; EAC TP TC 004; GB19510.1,GB19510.14; KC61347-1,KC61347-2-13; IS15885(Part2/Sec13),IP67 approved |